

ROLEC*EV*

SECURICHARGE

Intelligent EV charging unit

Manufactured in the UK

SECURICHARGE

Intelligent EV charging unit

NEW MODELS
Contactless payment terminal & LCD display screen

The SECURICHARGE is a heavy-duty and vandal-resistant EV charging unit. An ideal wall-mounted solution for car parks in exposed locations.

Effortless integration with any OCPP chargepoint management system offers an ideal plug-and-charge or pay-to-charge solution. Seamless charging experience for EV drivers via an app, RFID card/fob, or optional contactless payment. Additionally, an optional 5″ LCD screen displays real-time charging status.

Feature-rich, this EV charger supports dynamic load balancing and is equipped with PME fault detection to reduce installation costs. Available in 1way or 2way versions, providing up to 22kW superfast charging.





Product features

- Plug & charge, app, contactless payment (model dependant), or RFID controlled charging
- Choose from 1x or 2x universal charging socket(s)
- Up to 7.4kW or 22kW charging output(s)
- PME fault detection (no earth rod required)
- Supports dynamic load balancing & static load management
- OCPP 1.6 compliant (can integrate with any back-office)
- Over-the-air firmware / software updates
- Built-in AC overload & fault current protection (RCBO)
- Built-in 6mA DC leakage protection
- Dual tamper and breach security notifications
- Lockable front access door (model dependant)
- 5" LCD Screen (model dependant)
- Cable lock security feature (can be permanently locked by user)
- MID-approved energy metering
- 4G / Wi-Fi / Ethernet connectivity
- Conforms with PAS 1899 accessible charging standard*
- Strong and durable IP54 / IK10 rated
- Wall or post mountable

Powered by MONTA

Other preferred back-office and mobile app partners:

Fuuse

wattif

ChargePlace Scotland electric vehicle charging



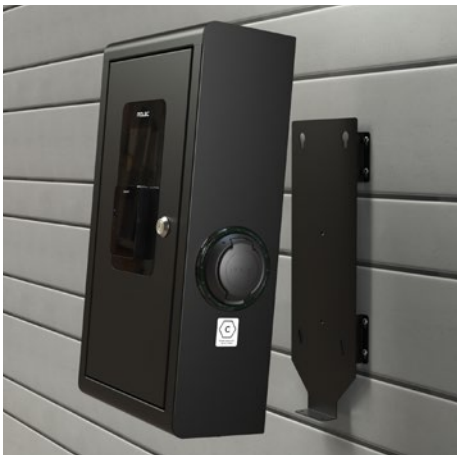

Independent back plate included as standard on models with front access door

*When installed at the specified height

OCPP 1.6 compliant

Ability to integrate with any OCPP compliant chargepoint management system and app.

Easy to operate

Quick and simple ways to operate; plug & charge, app, RFID card/fob, or optional contactless payment.

Eligible for grant funding

This range is approved for grant funding. For more information visit: rolecserv.com/ozev-grant-funding

4G / Wi-Fi / Ethernet enabled

Complete with secure 4G, Wi-Fi and Ethernet connectivity, ensuring chargers are always online 24/7.

Branding & colour options available

Rolec offers a bespoke chargepoint branding service; from logos & brand colours, to vinyl wraps.

No earth rod required

Equipped with built-in PME fault detection, saving installation time and costs.

The details

OPTIONAL FEATURE

LCD SCREEN

The 5" LCD screen, protected by a tempered glass front, provides clear step-by-step charging instructions, real-time charging status, and live MID meter readings for each outlet. Support contact information is also conveniently displayed at the bottom of the screen.

OPTIONAL FEATURE

GO CONTACTLESS

The market-leading integrated contactless payment terminal offers EV drivers a hassle-free tap-and-charge experience. Perfect for public locations.

LEARN MORE

Go to www.bit.ly/3WA8EYf



UP TO 22KW

Available in both single phase and three phase models, providing up to 22kW superfast charging.

SECURICHARGE is compatible with all EVs & PHEVs, charging at the fastest speed possible, ensuring vehicles are ready to go in no time.

ACCURATE BILLING

Built-in MID-approved energy metering ensures accurate consumption reporting, which is essential for businesses and residential car parks, wishing to bill for their usage. Use our back-office management platform to generate revenue by setting your own tariffs.

SAFE AND SECURE

Rolec's entire EV chargepoint range is fully UK Smart Charge Point Regulation compliant, and come with a 3 year warranty for added peace of mind.

Chargers receive over-the-air updates ensuring a safe and future-proof product 24/7.

The details

Model Variations

				
	SECURICHARGE with LCD screen & contactless payment terminal	SECURICHARGE with LCD screen	SECURICHARGE with contactless payment terminal	SECURICHARGE with standard features
Plug & charge operation	✓	✓	✓	✓
Mobile app operation	✓	✓	✓	✓
RFID card/fob operation	✓	✓	✓	✓
Contactless payment terminal	✓		✓	
5″ LCD screen	✓	✓		
Lockable front access door	✓	✓	✓	Optional
Wall/post mounting plate	✓	✓	✓	
Charging speeds (Max. kW)	7.4 | 22	7.4 | 22	7.4 | 22	7.4 | 22
Charging outputs	1x | 2x	1x | 2x	1x | 2x	1x | 2x
Colour options	●	●	●	● ● ○
Product codes	ROLEC3111B ROLEC3121B ROLEC3113B ROLEC3123B	ROLEC2111B ROLEC2121B ROLEC2113B ROLEC2123B	ROLEC1111B ROLEC1121B ROLEC1113B ROLEC1123B	ROLEC0111B/G/W ROLEC0121B/G/W ROLEC0113B/G/W ROLEC0123B/G/W

Specifications

Product Overview

	Connection Type	Charging Output	Input Supply	Unit Colour	Additional Features	Product Code
Single Phase Units	1x Universal charging socket	Up to 7.4kW (32A)	1x Up to 32A Single Phase* 230V AC (±10 %) 50/60Hz	● Black	LCD screen & contactless payment terminal	ROLEC3111B
					LCD screen	ROLEC2111B
					Contactless payment terminal	ROLEC1111B
					None	ROLEC0111B
				● Grey	None	ROLEC0111G
				○ White	None	ROLEC0111W
	2x Universal charging sockets	Up to 7.4kW (32A) per socket	1x Up to 63A Single Phase* 230V AC (±10 %) 50/60Hz	● Black	LCD screen & contactless payment terminal	ROLEC3121B
					LCD screen	ROLEC2121B
					Contactless payment terminal	ROLEC1121B
					None	ROLEC0121B
				● Grey	None	ROLEC0121G
				○ White	None	ROLEC0121W
Three Phase Units	1x Universal charging socket	Up to 22kW (32A)	1x Up to 32A Three Phase* 400V AC (±10 %) 50/60Hz	● Black	LCD screen & contactless payment terminal	ROLEC3113B
					LCD screen	ROLEC2113B
					Contactless payment terminal	ROLEC1113B
					None	ROLEC0113B
				● Grey	None	ROLEC0113G
				○ White	None	ROLEC0113W
	2x Universal charging sockets	Up to 22kW (32A) per socket	1x Up to 63A Three Phase* 400V AC (±10 %) 50/60Hz	● Black	LCD screen & contactless payment terminal	ROLEC3123B
					LCD screen	ROLEC2123B
					Contactless payment terminal	ROLEC1123B
					None	ROLEC0123B
				● Grey	None	ROLEC0123G
				○ White	None	ROLEC0123W

*Chargepoint(s) will downrate if the input supply is lower than the maximum charging output

Specifications

Unit Dimensions

SecuriCharge 1way/2way unit:

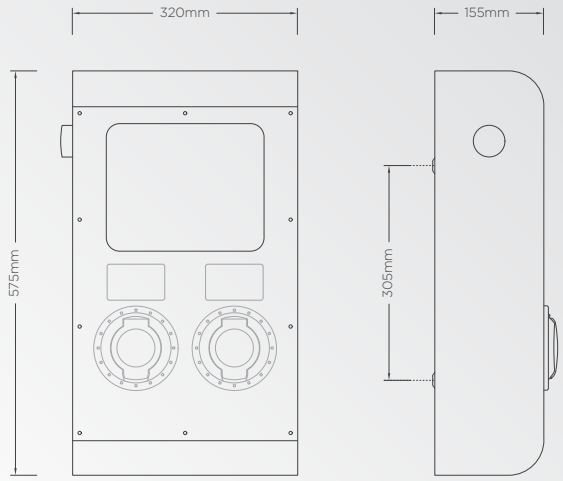

SecuriCharge with LCD screen & contactless payment terminal:

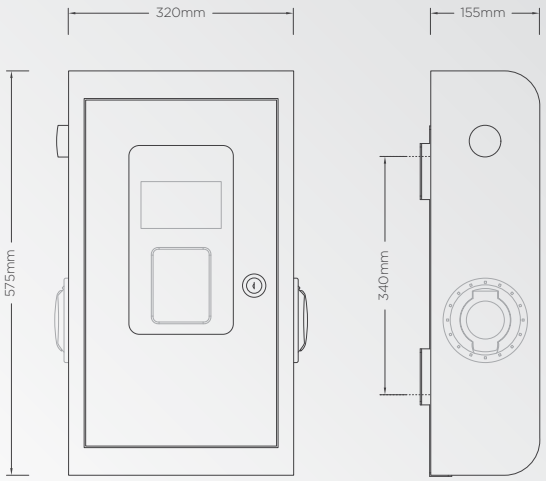

Mounting post for 1x / 2x SecuriCharge units:

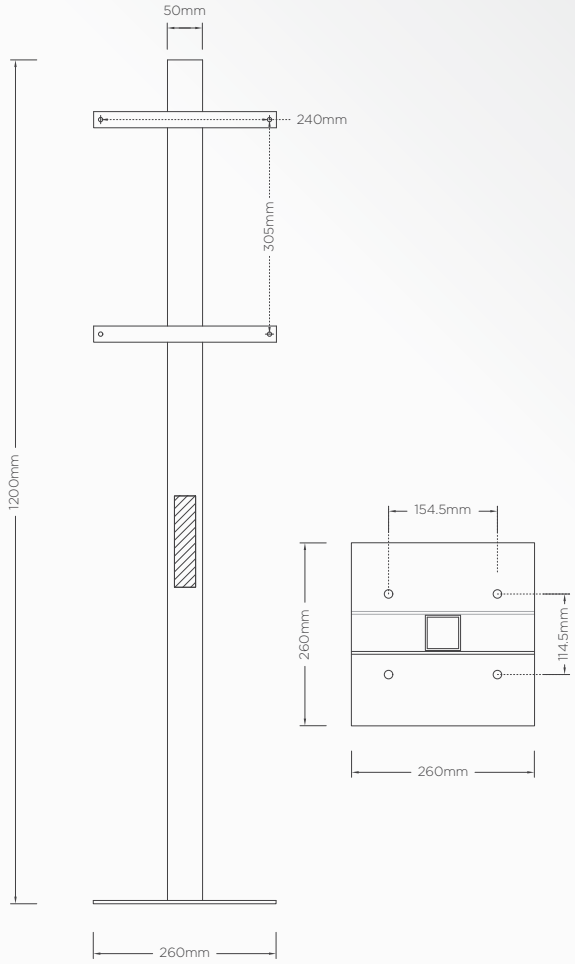

Rolec universal mounting post (fits up to 2 chargers):

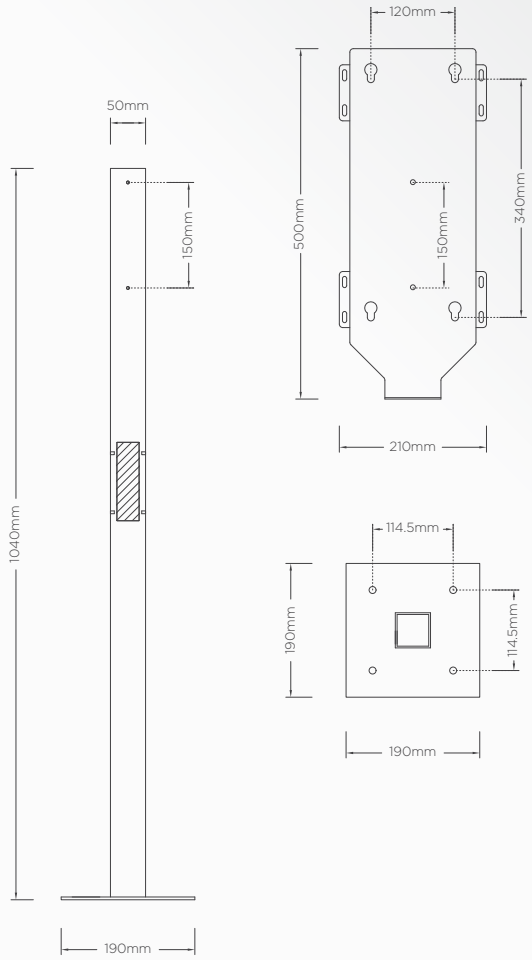

Specifications

Technical Data

User Interface	• Mobile app
	• Contactless card payment terminal (EMVCo. L1 v3.0 Certified) (model dependant)
	  • RFID reader (ISO14443 A & B (T=CL), Desfire EV2/3 & Mifare Classic protocols)
	  • NFC (ISO18092)
	• 5″ LCD display screen
	• RFID reader(s) (MIFARE ISO/IEC 14443 A) (model dependant)
	• Plug & charge
	• RGB LED status indicator halo(s) – configurable

Charge Protocol	Mode 3 (IEC 61851-1)
Protection	• AC overload & fault current protection – 40A 30mA Type A RCBO (per socket) • DC fault protection – 6mA • Lightning surge, over temperature protection • PME fault detection – No earth electrode/rod required • Supports automatic dynamic load balancing (may require additional hardware) • Supports static load management (software configurable)
Cable Terminals	• Single Phase – 3x 50mm 1P + N + E • Three Phase – 5x 50mm 3P + N + E

Communications	• 4G LTE Cat-1 (built-in nano SIM, subscription required)
	  • LTE FDD: B1/B3/B5/B7/B8/B20/B28
	  • GSM: B2/B3/B5/B8
	• Wi-Fi 802.11 b/g/n 2.4 GHz (2412-2472 MHz / 2422-2462 MHz)
	• NFC 13.56 MHz
	• RJ45 Ethernet connection
	• Bluetooth Low Energy (BLE 4.1) 2402-2480 MHz (for installer configuration purposes)
	• OCPP 1.6J
	• Cyber security – Data encryption level TLS 1.2

Energy Metering	Integrated Class 1 MID compliant metering
Standby Power Consumption	• Charging circuits – < 7.5W (per socket) • Panel heater – 8W • LCD display screen – < 3W (where fitted) • Contactless card payment terminal – 18W (where fitted)
Dimensions	320mm x 575mm x 155mm (W x H x D)
Weight	< 15.5kg (model dependant)
Environmental	• Ingress protection – Enclosure IP54, Socket IP54 • Impact protection – IK10 • Security – Dual tamper and breach notifications • Operating temperature – -30°C to +50°C • Operating humidity – 5% to 95%
Materials	• Body (& door where fitted) – Heavy duty 1.5mm Steel applied with 45–55 microns of Zinc primer • Finish – Corrosive resistant, textured Polyester powder coating • Fascia – Tempered glass (where fitted)
Unit Colour	● Black ● ○ Grey & White (model dependant) Other colours available upon request
Certifications & Compliances	• EV Charging Compliance – EN 61851-1:2019, EN 61851-22:2002 • Smart Charge Points – (SI 2021/1467) • Wiring Regulations – BS 7671:2018+A2:2022 • EMC Compliance – EN 61000-6-3:2007+A1:2011, EN 61000-6-2:2005, 2014/30 /EU, SI 2016/1091, (EN 301 489-1 V1.9.2, EN 301 489-3 V2.1.1, EN 301 489-17 V1.3.1, EN 301 489-19 V2.1.1, EN 301 489-52 v1.1.0)[P] • Safety Compliance (LVD) – EN 62368-1:2014, 2014/35/EU, SI 2016/1101, EN 60950-22:2006[P] • 30 mA AC & 6 mA DC Protection – in accordance with IEC EN 61009-1:2012+A12:2016, IEC61009-2-1:1994+A11:1998, BS IEC 62955:2018 • Communications / RED – EN 62311:2008, 2014/53/EU, SI 2017/1206, EN 300 330 V2.1.1 (2017-02), EN 301 908-1 V15.1.1 (2021-09), EN 301 908-13 V13.2.1 (2022-02), EN 301 511 V12.5.1 (2017-03), EN 300 328 V2.2.2 (2019-07), EN 300 440 V2.2.1 (2018-07), (EN 301 908-2 V13.1.1, EN 303 413 V1.1.1)[P] • Environmental Protection – BS EN 60529:1992+A2:2013 • Impact Rating – BS EN 62262:2002+A1:2021 • Metering – 2014/32/EU, SI 2016/1153 • Accessibility – PAS 1899 accessible charging standard (when installed in at the specified hight) • RoHS – 2011/65/EU, SI 2012/3032 • REACH – 1907/2006, REACH etc. (Amendment) Regulations 2021 • Payter Payment Device – CE, FCC, RoHS, WEEE , REACH, EMVCo, PCI-PTS 6.x, TQM, MasterCard, VISA, American Express, Discover, Diners [P] • Certification Markings – CE & UKCA
Warranty	3 years

Options & accessories

Product Code	Item Description
RFID0010	RFID card
RFID0020	RFID fob
EVFP0035	Rolec universal mounting post (fits up to 2 chargers)
EVFP0060	Mounting post to fit 1x SecuriCharge unit
EVFP0070	Mounting post to fit 2x SecuriCharge units
EVCB0020	Root mount protection barrier – 48mm
EVCB0040	Surface mount protection barrier – 48mm
EVPS0010	EV parking sign – A4 landscape (Other sizes are available)
EVPP0100	5m 32A Type 2 to Type 2 charging cable
EVPP0107	10m 32A Type 2 to Type 2 charging cable
EVPP0105	5m 32A Three phase Type 2 to Type 2 charging cable
EVPP0108	10m 32A Three phase Type 2 to Type 2 charging cable (Other cables are available, including Type 1 options)
EVRS0030	Remote wall mount for Type 2 charge plug holster
ACSR0520	Perific fuse protection device – 3x 36mm current sensors
ACSR0530	Perific fuse protection device – 3x 100mm current sensors
ACSR0125	100A up to 35mm² screened CT clamp with 10m cable


EVFP0035


RFID0020


EVRS0030



EVPS0010


ACSR0125


ACSR0530






EVPP0100

Branding & colour options available

Rolec offer a bespoke chargepoint branding service; from logos & brand colours, to vinyl wraps. This can be arranged at time of order. Contact ROLEC for details.

Brand names, logos and trademarks used herein remain the property of their respective owners. This listing of any firm or their logos is not intended to imply any endorsement or direct affiliation with Rolec Services Ltd. and is purely to demonstrate branding opportunities.

Chargepoint management



Monta's chargepoint management platform provides businesses and organisations with the ability to deploy and self-manage their very own electric vehicle charging network. Ideal for workplace, fleet, commercial and residential locations.

Other preferred back-office partners:

Fuuse

wattif

ChargePlace Scotland
electric vehicle charging

+ many more

- Full & automated control of your chargepoints
- Unlock additional revenue streams
- Set chargepoints for public and/or private use
- Set different pricing for individual chargepoints & groups
- Dynamic pricing allows operators to set pricing in line with their hour-by-hour energy cost
- Fully scalable solution; add or remove chargepoints & users
- Complete fleet management solutions with analytical feedback & reporting
- Reduce charging costs and CO_2 with Smart Charge feature
- Vehicle integration provides visibility of battery size, SOC, percentage & location etc.
- Automatically reimburse employees' home charging
- Smart queuing system that sends notifications to drivers when they become available
- Over-the-air updates and self-healing algorithms ensure charger stability & availability
- Static, Dynamic or True Dynamic load balancing options
- EV Roaming feature, allowing chargepoints to be available on other apps

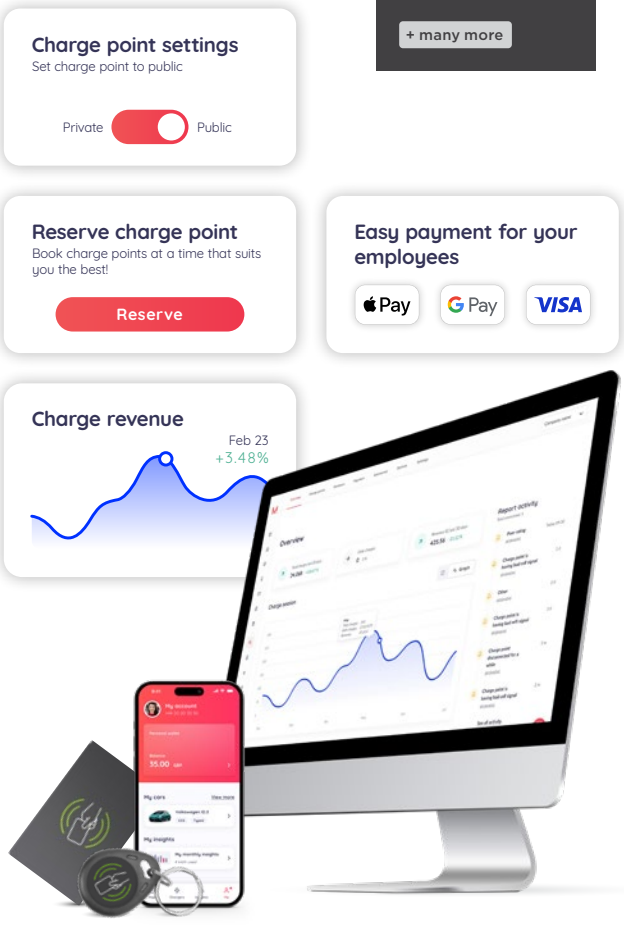

For more information about Monta's chargepoint management solutions and pricing, see the Powered by Monta Overview Sheet

Chargepoint operation



Charge your EV on your terms. With Monta you have full control over your charging experience, at home or on the road.

- Easily locate and navigate using the chargepoint map
- Remotely control your home EV charging
- Choose your ready time and choose to prioritise lower costs, lower CO_2 or only using renewable energy
- Schedule charges so your car is ready when you are
- Integrate with most EV manufacturer apps and cars
- Real-time information on your car and battery levels to maximize your charging experience
- Solar PV & battery storage integration
- Share and give charging access to friends, family and guests
- Set your home charger for public use with custom pricing
- Access to over 500,000 public chargepoints across Europe
- Easily initiate charging and complete payments via credit card, Apple Pay, Google Pay or Monta Wallet
- 24/7 online chat or email support for help when you need it most

The Monta Charge app is 100% free with no subscription cost when charging at home

Other preferred mobile app partners:

Fuuse

wattif

ChargePlace Scotland
electric vehicle charging

ev.energy



DOWNLOAD THE APP

GET IT ON Google Play

Download on the App Store

RFID activation

Great for quick activation, RFID cards or key fobs are easily accessible and add for a much simpler charging experience, which can also be used alongside the mobile app.



For more details about the Monta solution for EV drivers and the Monta app, please visit **www.monta.com/uk/home-charging**



THIS DOCUMENT CONTAINS INFORMATION THAT IS SUBJECT TO CHANGE WITHOUT NOTICE.

The latest version of this publication can be downloaded at https://www.rolecserv.com/downloads-ev-charging

Illustrations of the product and user interface are for marketing purposes only.

Brand names, logos and trademarks used herein remain the property of their respective owners.
This listing of any firm or their logos is not intended to imply any endorsement or direct affiliation
with Rolec Services Ltd. and is purely to demonstrate branding opportunities.

© 2024 by Rolec Services Ltd. All rights reserved.

EVSD-V02-R1 SecuriCharge Data Sheet

ROLECEV

t: 01205 724754
e: enquiries@rolecserv.co.uk

www.rolecserv.com